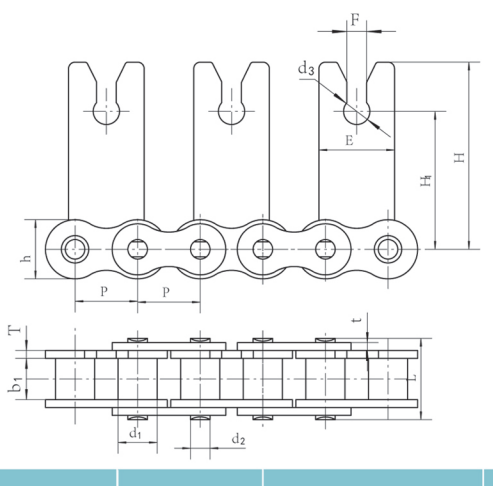

链号 Chain No.	节距 Pitch	滚子外径 Roller diameter	内节内宽 Width between inner plates	销 轴 Pin		链 板 Plate		最小抗拉强度 Minimum tensile strength
	P mm	d_1(max) mm	b_1(min) mm	d_2 mm	L mm	h mm	t/T mm	Fu(min) kN
60SS-SH	19.05	11.91	12.57	5.94	25.3	18	2.4	21

链号 Chain No.	E mm	H_1 mm	H mm	d_3 mm	F mm
60SS-SH	23	42	57	8	6

速冻隧道链

Deepfreeze tunnel chain

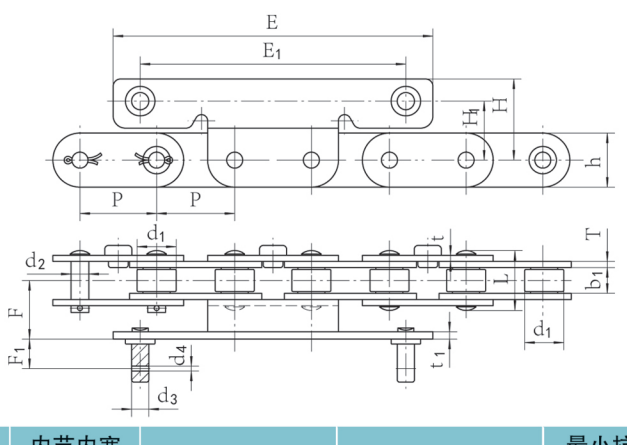

链号 Chain No.	节距 Pitch	滚子外径 Roller diameter	内节内宽 Width between inner plates	销 轴 Pin		链 板 Plate		最小抗拉强度 Minimum tensile strength
	P mm	d_1(max) mm	b_1(min) mm	d_2 mm	L mm	h mm	t/T mm	Fu(min) kN
C210E-F	31.75	15.88	10.5	7.47	28.7	22	3.2	42

链号 Chain No.	E_1 mm	E mm	F_1 mm	F mm	H_1 mm	H mm	d_3 mm	d_4 mm	t_1 mm
C210E-F	108	130	12	25.5	24	33	7	2	3.2

中链® 黄山中友链条
HSZY CHAIN
HSZYC®
冷饮食品链 Cold Drink & Food Processing Chain

Ⅰ型

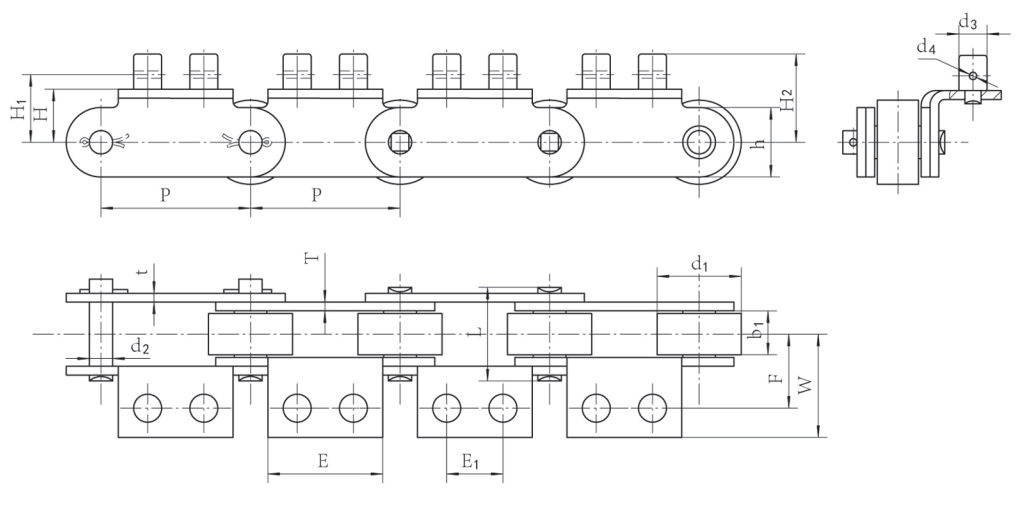

Ⅱ型

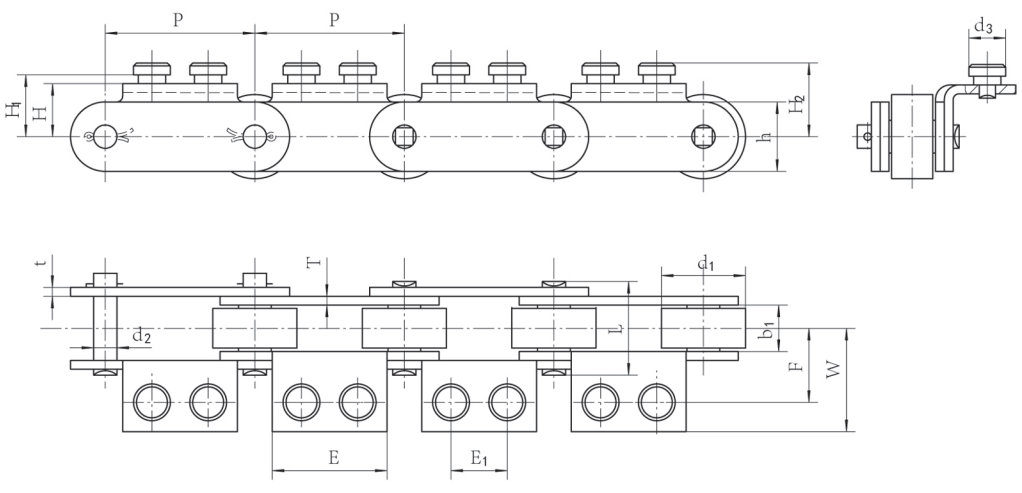

链号 Chain No.	节距 Pitch	滚子外径 Roller diameter	内节内宽 Width between inner plates	销 轴 Pin		链 板 Plate		最小抗拉强度 Minimum tensile strength
	P mm	d_1(max) mm	b_1(min) mm	d_2 mm	L mm	h mm	t/T mm	Fu(min) kN
C216AL-K2ZB-Ⅰ	50.8	28.58	15.75	7.92	32.7	24	3	40
C216AL-K2ZB-Ⅱ	50.8	28.58	15.75	7.92	32.7	24	3	40

链号 Chain No.	E_1 mm	E mm	F mm	W mm	H mm	H_1 mm	H_2 mm	d3 mm	d4 mm
C216AL-K2ZB-Ⅰ	19.1	39	25.5	35.5	18	23	30	9.5	2.5
C216AL-K2ZB-Ⅱ	19.1	39	25.5	35.5	18	21	25	12.5	/

中链® 黄山中友链条
HSZY CHAIN
HSZYC®
冷饮食品链 Cold Drink & Food Processing Chain

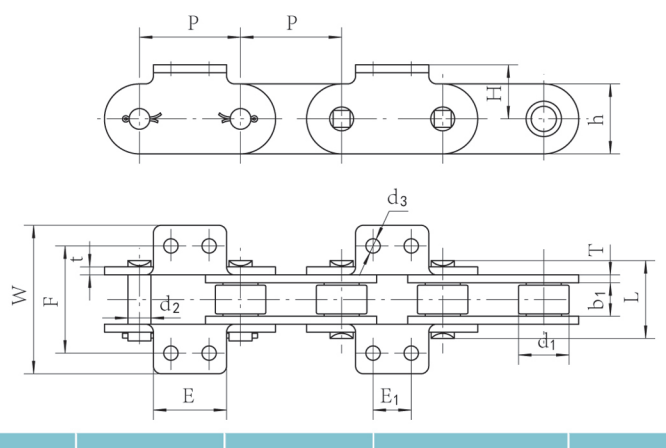

链号 Chain No.	节距 Pitch	滚子外径 Roller diameter	内节内宽 Width between inner plates	销 轴 Pin		链 板 Plate		最小抗拉强度 Minimum tensile strength
	P mm	d_1(max) mm	b_1(min) mm	d_2 mm	L mm	h mm	t/T mm	Fu(min) kN
C216AL-K2ZB-Ⅲ	50.8	28.58	15.75	7.92	32.7	24	3	40

链号 Chain No.	E_1 mm	E mm	F mm	W mm	H mm	d_3 mm
C216AL-K2ZB-Ⅲ	19.1	39	51	71	18	6.6

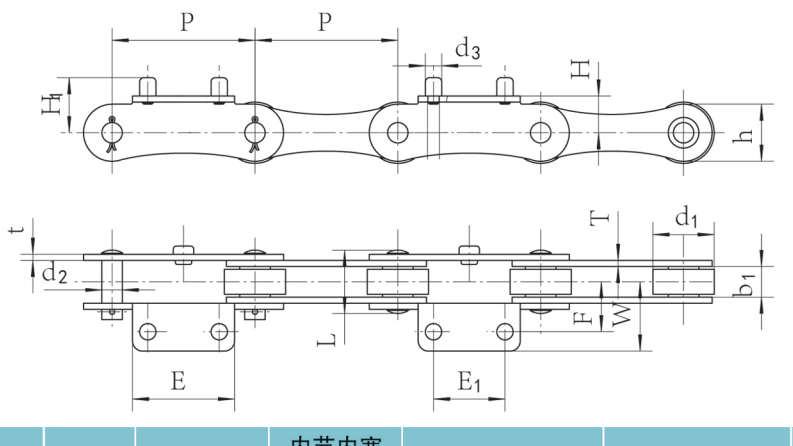

链号 Chain No.	节距 Pitch	滚子外径 Roller diameter	内节内宽 Width between inner plates	销 轴 Pin		链 板 Plate		最小抗拉强度 Minimum tensile strength
	P mm	d_1(max) mm	b_1(min) mm	d_2 mm	L mm	h mm	t/T mm	Fu(min) kN
CF70-SK2	70	30	15	10	32.4	28	3	40

链号 Chain	E_1 mm	E mm	F mm	W mm	d_3 mm	H mm	H_1 mm
CF70-SK2	35	50	24.5	34	M6	18	28