不锈钢侧置大滚轮输送链 Stainless Steel Side Big Roller Chain

千鸟型

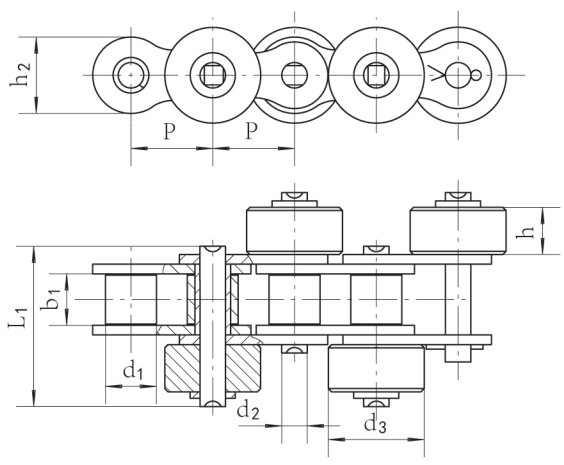

平行型

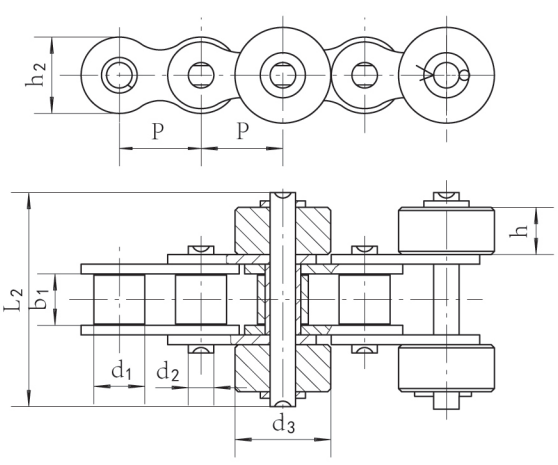

链号 Chain No.	节距 Pitch	滚子直径 Roller diameter	内节内宽 Width between inner plates	内链板高度 Inner plate depth	销轴直径 Pin dia	销轴长度 Pin length		滚轮直径 Wheel diameter	滚轮高度 Wheel thickness	极限拉伸载荷 Ultimate tensile strength
	P mm	d_1(max) mm	b_1(min) mm	h_2(max) mm	d_2 mm	L_1 mm	L_2 mm	d_3 mm	h mm	Q(min) KN
SR40SS	12.7	7.92	7.85	12	3.96	25.8	35.3	15.88	7.8	9.8
SR50SS	15.875	10.16	9.40	15	5.08	31.2	42.3	19.05	9.4	16.2
SR60SS	19.05	11.91	12.57	18	5.94	39.45	55.95	24	12.6	21
SR80SS	25.4	15.88	15.75	22.23	7.92	50.9	69.6	28.58	15.7	36
SR100SS	31.75	19.05	18.9	30.18	9.53	61	83.8	39.69	18.8	58.9

中链® 黄山中友链条
HSZY CHAIN
HSZYC®
不锈钢侧置大滚轮输送链 Stainless Steel Side Big Roller Chain

千鸟型

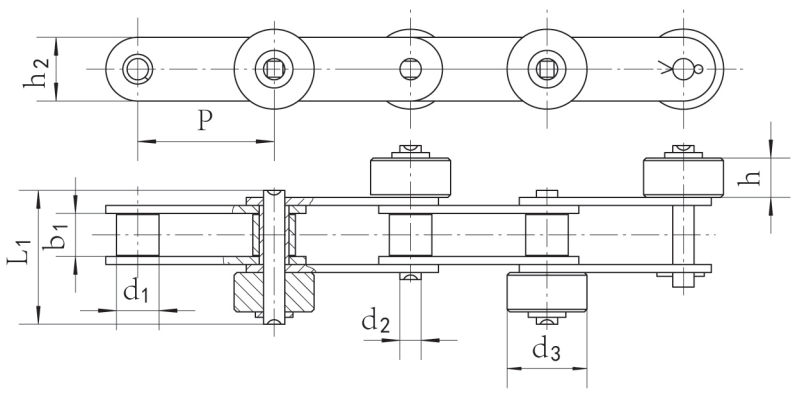

平行型

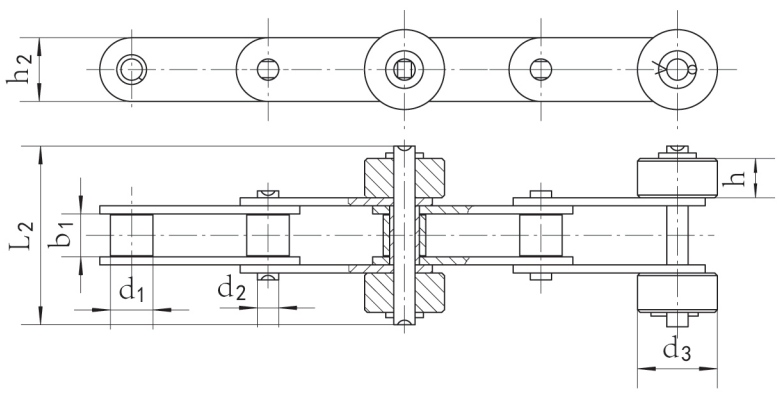

链号 Chain No.	节距 Pitch	滚子直径 Roller diameter	内节内宽 Width between inner plates	内链板高度 Inner plate depth	销轴直径 Pin dia	销轴长度 Pin length		滚轮直径 Wheel diameter	滚轮高度 Wheel thickness	极限拉伸载荷 Ultimate tensile strength
	P mm	d_1(max) mm	b_1(min) mm	h_2(max) mm	d_2 mm	L_1 mm	L_2 mm	d_3 mm	h mm	Q(min) KN
SRC2040SS	25.4	7.92	7.85	12	3.96	26.25	36.3	15.88	7.8	9.8
SRC2042SS		15.88						23		
SRC2050SS	15.875	10.16	9.40	15	5.08	30.9	42.4	19.05	9.4	16.2
SRC2052SS		19.05						27		
SRC2060HSS	38.1	11.91	12.57	18	5.94	43.9	58.5	22.23	12.6	21
SRC2080HSS	50.8	15.88	15.75	24	7.92	54.2	72.2	28.58	15.7	36
SRC2100HSS	63.5	19.05	18.9	30.18	9.53	64.9	87.9	39.69	18.8	58.9